Doc. No. HMI00132

Helioseismic and Magnetic Imager System Concept Review Preparation

13 March 2003

Stanford University
W. W. Hansen Experimental Physics Laboratory and Center for Space Science and Astrophysics
Stanford, CA

Lockheed Martin Space Systems Company
Advanced Technology Center
Solar & Astrophysics Laboratory
Palo Alto, CA

Agenda

Time	Topic	Speaker
1:00 – 1:05	Welcome	Title / Springer Scherrer / Bush
1:05 – 1:20	Concept and Flight Heritage	Bush
1:20 – 1:35	Changes from Original Proposal	Bush
1:35 – 1:50	Risk	Bush
1:50 – 2:05	HMI-S/C Compatibility	Carpenter
2:05 – 2:20	Technical Resources	Carpenter
2:20 – 2:35	*Break*	
2:35 – 3:35	Integration & Test	Springer
3:35 – 4:45	Programmatics	SU/LMSAL/GSFC

Lockheed Martin Solar & Astrophysics Lab (LMSAL)

HMI
Stanford University
LOCKHEED MARTIN
Advanced Technology Center

http://www.lmsal.com/maps.htm

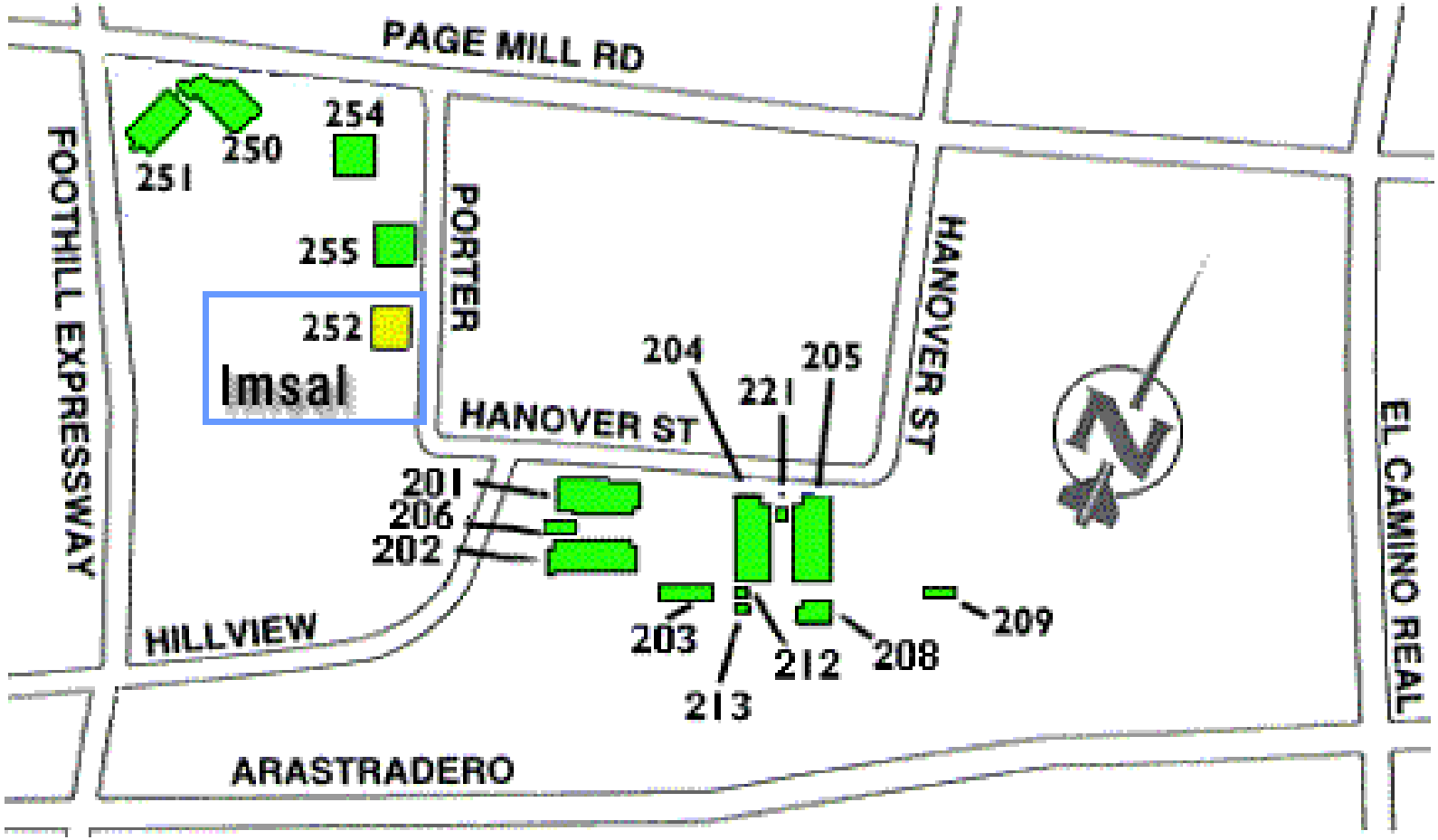

HMI Preparations for the SDO System Concept Review

Rock Bush
Stanford University
RBush@solar.stanford.edu
650.723.8162

HMI Instrument Concept

- The HMI instrument is an evolution of the successful Michelson Doppler Imager instrument which has been operating on the SOHO spacecraft for over seven years.
- The raw HMI observables are filtergrams of the full solar disk taken with a narrow band (~ 0.1 A bandpass) tunable filter in multiple polarizations.
- The primary science observables are Dopplergrams, line-of-sight magnetograms, vector magnetograms and continuum images computed from a series of filtergrams.
- Some of the key instrument design drivers include maintaining uniform image quality and performance through detailed optical and thermal design and rigorous testing.
- The vector magnetic field measurements are best decoupled from the helioseismology measurements, and a two camera design results to maintain image cadence and separate the two primary data streams.

HMI Design

- **The HMI design is based on MDI. Some common design features are:**
  - Front window designed to be the initial filter with widest bandpass.
  - Simple two element refracting telescope.
  - Image Stabilization System with a solar limb sensor and PZT driven tip-tilt mirror.
  - Narrow band tunable filter consisting of a multi-element Lyot filter and two Michelson interferometers.
  - Similar hollow core motors, filterwheel mechanisms and shutters.
- **The HMI design is based on MDI. The primary differences are:**
  - The observing line is the Fe I 617.3 nm absorption line instead of the Ni I 676.8 nm line. This observing line is used for both Doppler and magnetic measurements.
  - Rotating waveplates are used for polarization selection instead of a set of polarizing optics in a filterwheel mechanism.
  - An additional tunable filter element is included in order to provide the measurement dynamic range required by the SDO orbit.
  - The CCD format will be 4096x4096 pixels instead of 1024x1024 pixels in order to meet the angular resolution requirements.
  - Two CCD cameras are used in parallel in order to make both Doppler and vector magnetic field measurements at the required cadence.
  - The is no image processor – all observable computation is performed on the ground.

Proposal Optics Package – 3D view

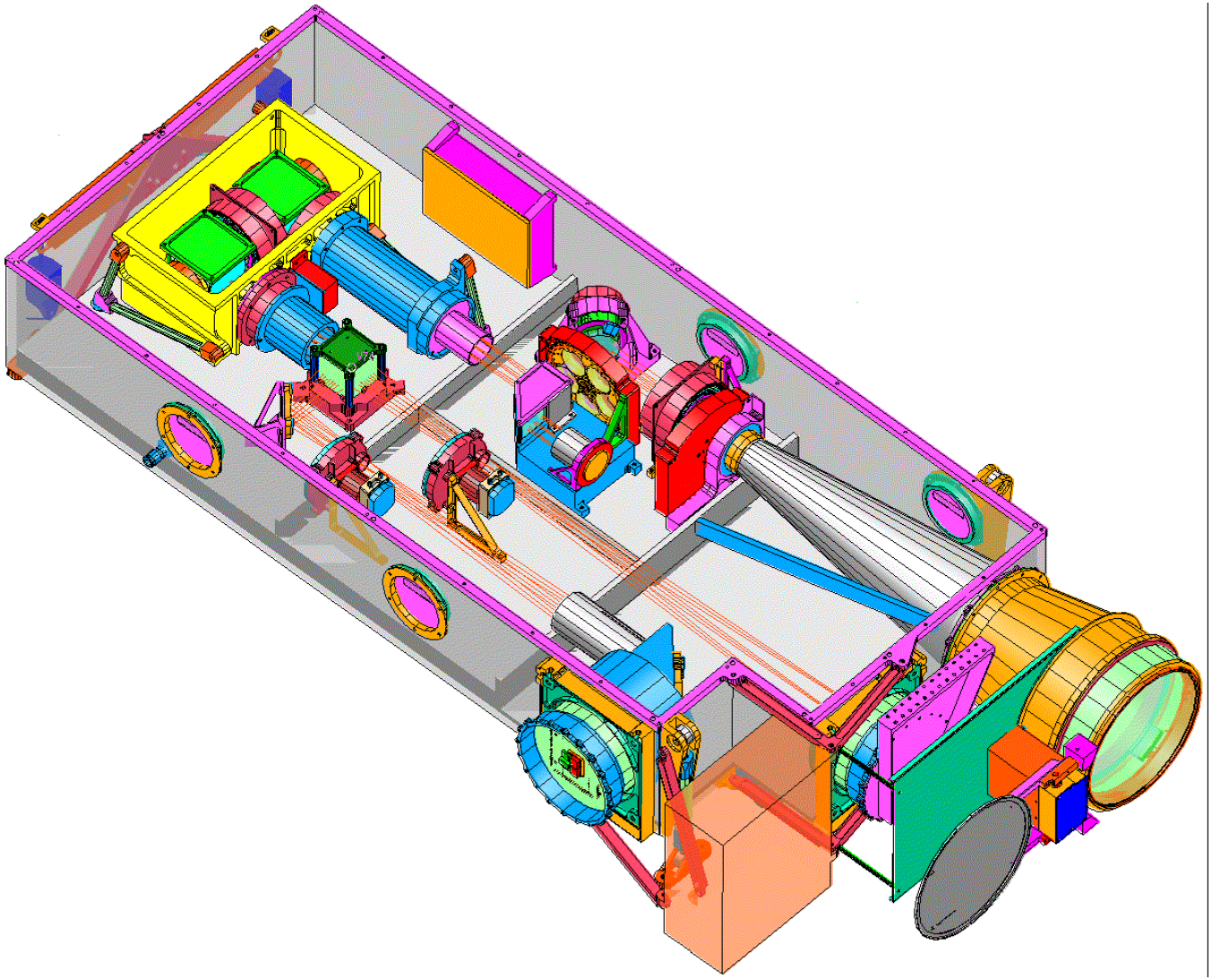

HMI Operations Concept

- The goal of HMI operations is to achieve a uniform high quality data set of solar Dopplergrams and magnetograms. This is best achieved by maintaining a single observing sequence that has minimal interruptions.
- The "Prime Observing Sequence" will be developed over the course of the HMI design and construction, tested as part of the sunlight vacuum performance tests, and optimized during in-flight commissioning. The intent is to maintain this observing sequence for the entire SDO mission.
- Periodic calibrations are required to monitor instrument performance and to provide data for correcting instrument changes. Short calibration sequences are required daily and bimonthly to track specific subsystems such as focus, filter tuning and polarization. Every six months, coordinated spacecraft maneuvers are required to determine the end-to-end flatfield and measure solar shape variations.
- After instrument commissioning, HMI commanding requirements will be minimal except for calibration activities and configuration for eclipses. It is anticipated that a single daily command load will be sufficient.

HMI Heritage

- The primary HMI heritage is the Michelson Doppler Imager instrument which has been successfully operating in space for over 7 years. Between launch in December 1995 and March 2003, almost 70 million exposures have been taken by MDI.
- Most of the HMI sub-systems are based on designs developed for MDI and subsequent space instruments developed at LMSAL.
  - Lyot filter has heritage from Spacelab-2/SOUP, SOHO/MDI, Solar-B/FPP instruments.
  - HMI Michelson interferometers will be very similar to the MDI Michelsons.
  - Hollow core motors, filterwheel mechanisms, shutters and their controllers have been used in SOHO/MDI, TRACE, SXI, Epic/Triana, Solar-B/FPP, Solar-B/XRT, Stereo/SECCHI.
  - The Image Stabilization System is very similar to the MDI design, and aspects of the ISS have been used in TRACE and Stereo/SECCHI.
  - The main control processor planned for HMI is being used on the SXI and Solar-B/FPP instruments.

Michelson Doppler Imager Flight Optics Package

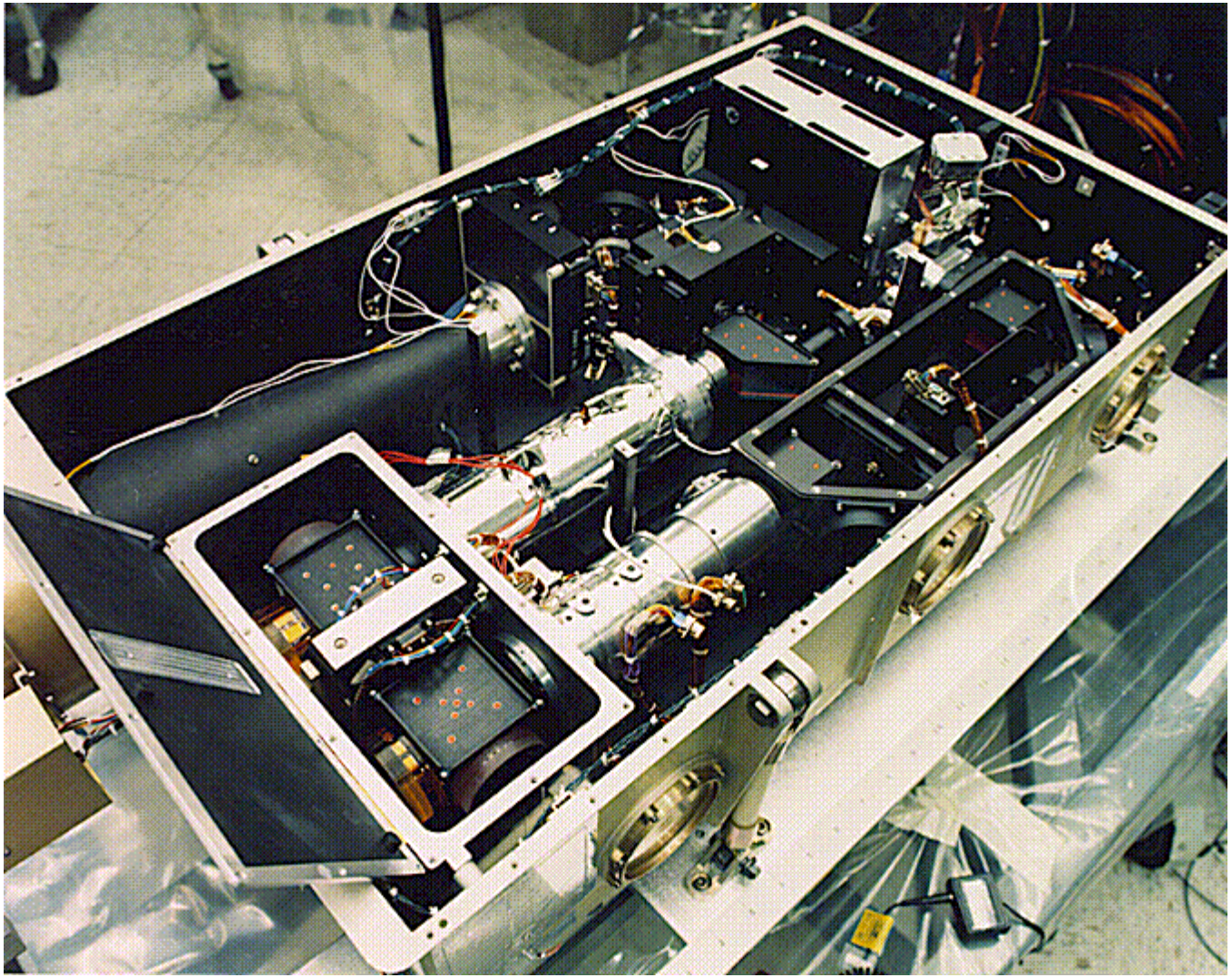

MDI Lyot Elements and Michelson Interferometers

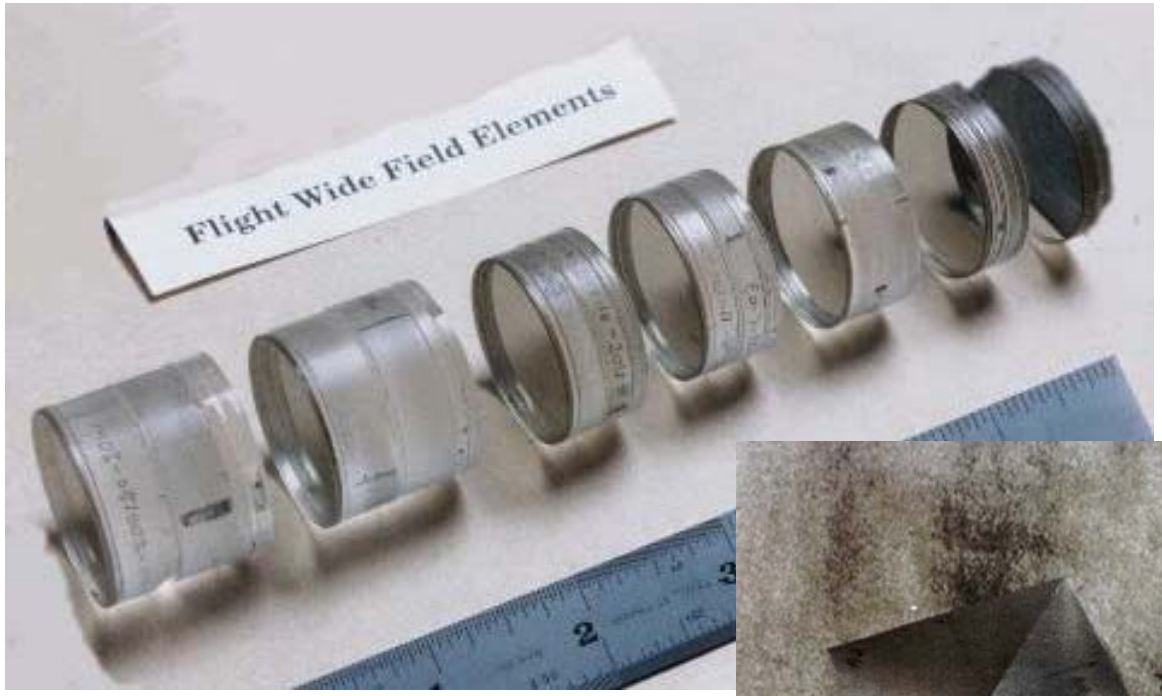

MDI Mechanisms Heritage

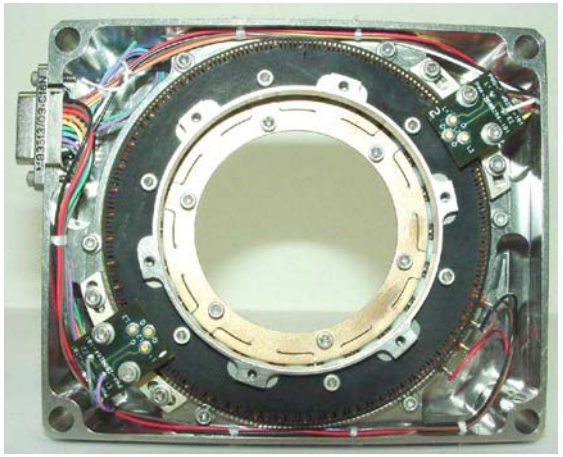

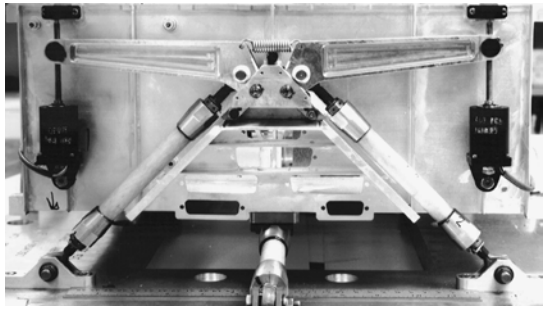

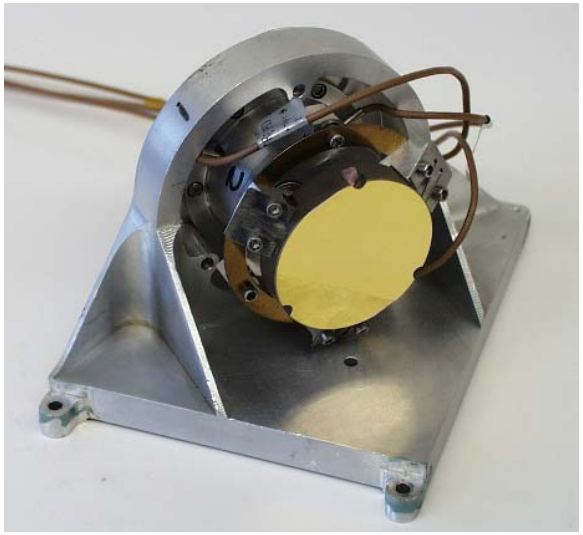

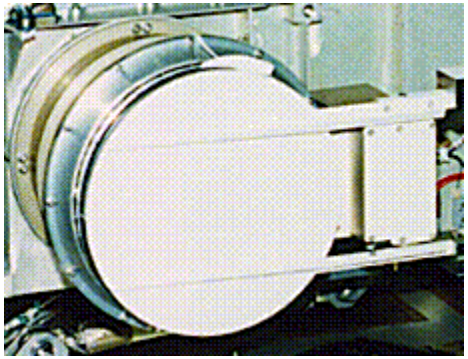

Changes from Original Proposal – Team

HMI
Stanford University
LOCKHEED MARTIN
Advanced Technology Center

- The primary HMI development team, Stanford University and Lockheed Martin Solar and Astrophysics Lab, are collaborating as stated in the original proposal.
- The British partners who proposed to supply the CCD cameras for HMI are not able to do so due to funding limitations in the UK.
- It is anticipated that the proposed British science co-investigators will still be able to participate in the science analysis development and data analysis.
- All other science co-investigators are as proposed. The only co-investigator team beside LMSAL being funded in Phase A is at the High Altitude Observatory. They are supporting the vector magnetic field requirements development.
- We have requested that a Swiss group led by W. Schmutz join the HMI team in order to provide the DORADE total solar irradiance monitor as part of the SDO payload.

DORADE – Total Solar Irradiance Monitor

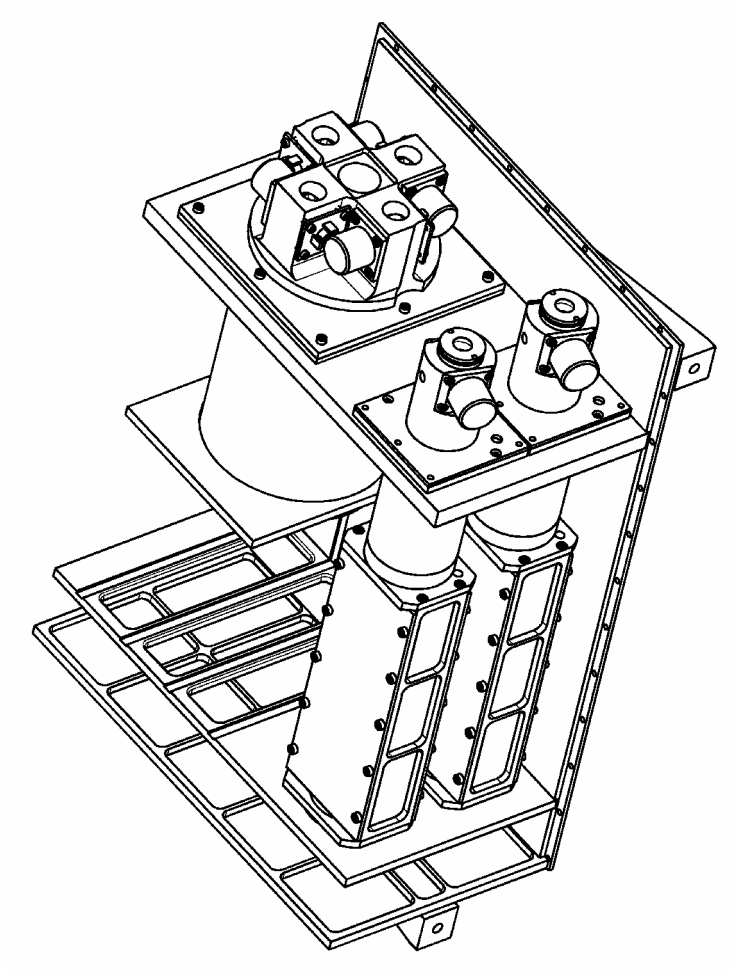

Cut-away view of the DORADE package.
Two PMO6-V radiometers are shown to the right and the new PMO-PS radiometer is shown to the left.

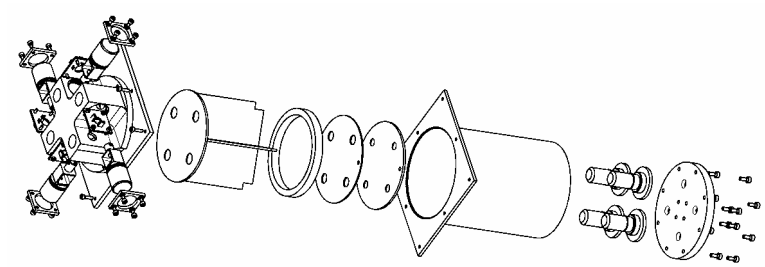

Exploded view of the PMO-PS absolute radiometer.

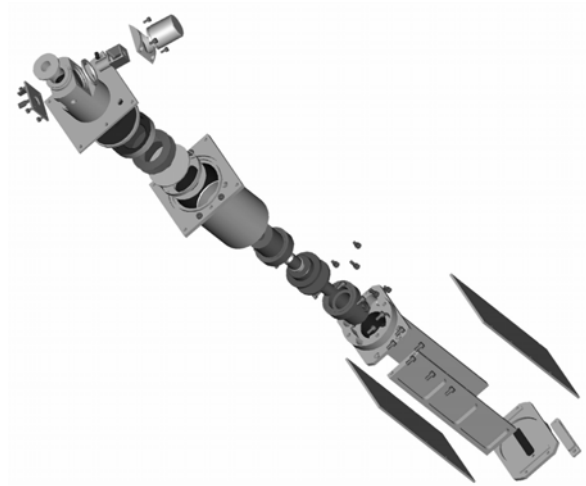

Exploded view of the PMO6-V absolute radiometer.

Changes from Original Proposal – Management

- There are no changes in the management approach and key personnel described in the HMI proposal.

Changes from Original Proposal – Technical

- The HMI observing line has been changed from Ni I 676.8 nm to Fe I 617.3 nm in order to improve the vector magnetic field measurement accuracy.
- The optical design has been updated to accommodate the observing line change, and an additional lens incorporated to allow smaller Michelson interferometers.
- Two additional hollow core motors have been provisionally added to provide redundancy for the Michelson tuning and polarization selection.
- In order to increase reliability of the camera system, a second high rate telemetry compressor and spacecraft interface has been tentatively added.
- The RAD6000 processor has been selected instead of the BAe RAD750 processor.
- The Optics Package thermal design has been updated by decoupling the camera electronics from the OP structure, and additional operational heater power will be needed for thermal control.

Proposal Optics Package Layout

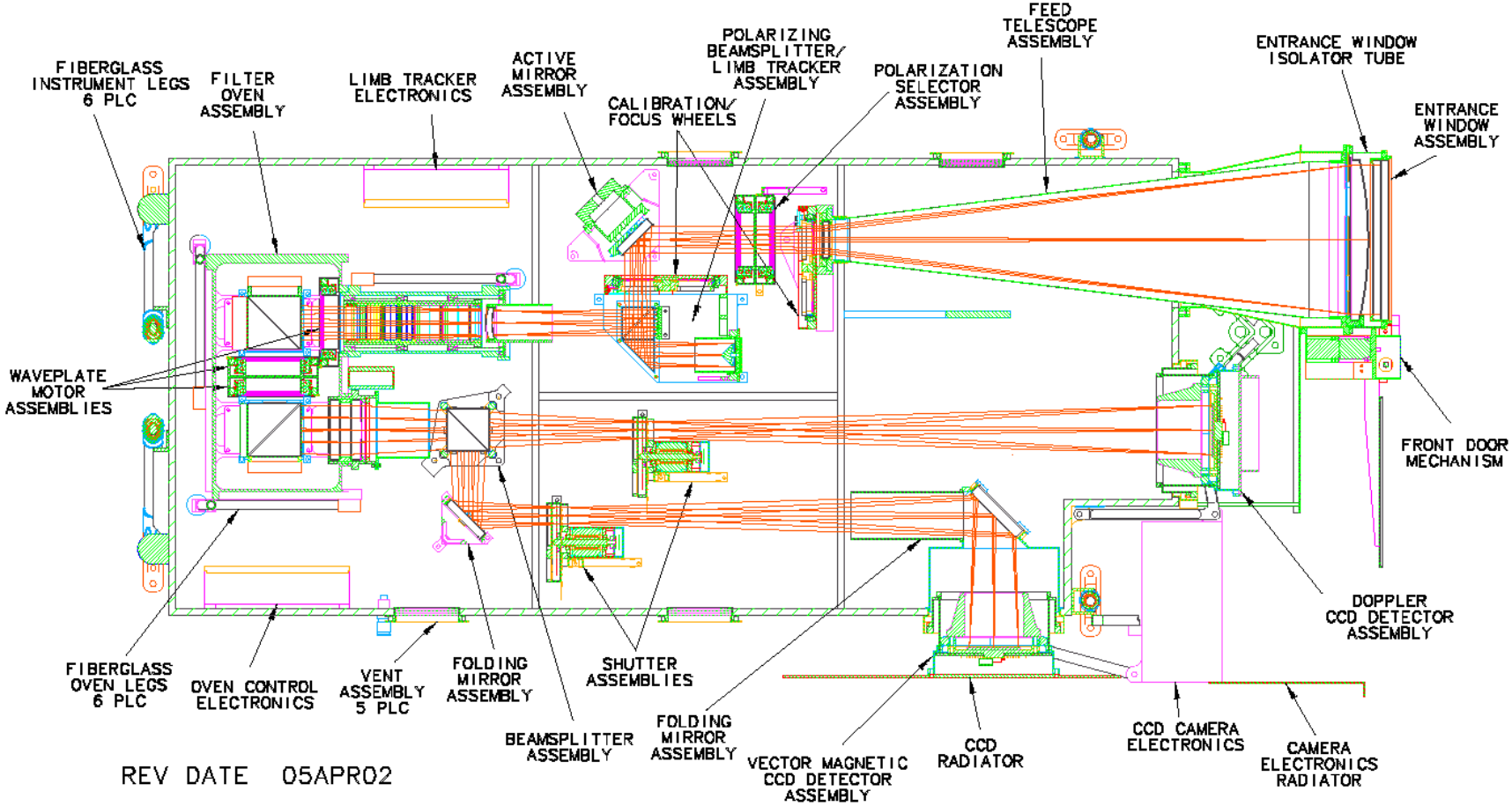

Current Optics Package Layout

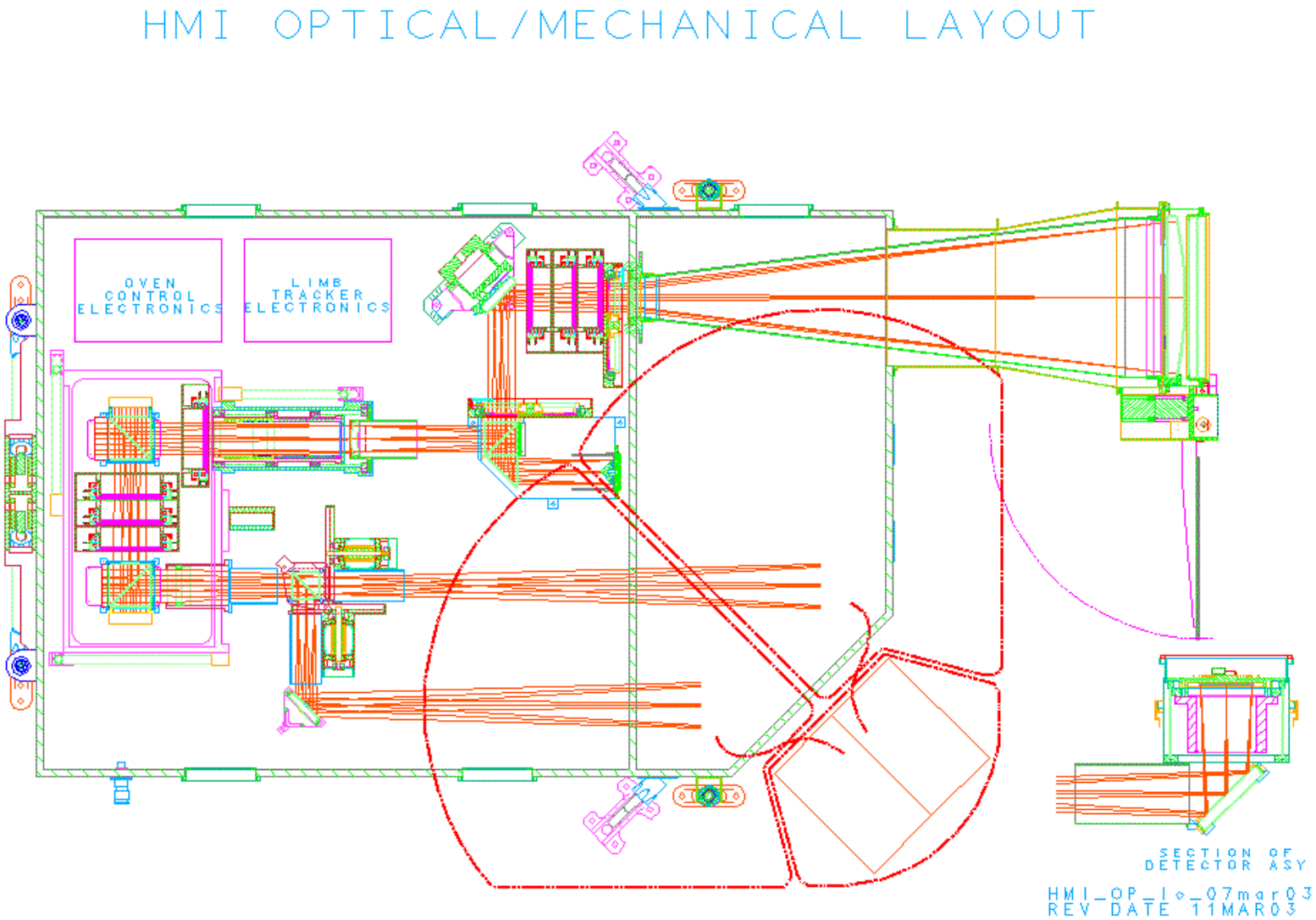

Current Optics Package – 3D view

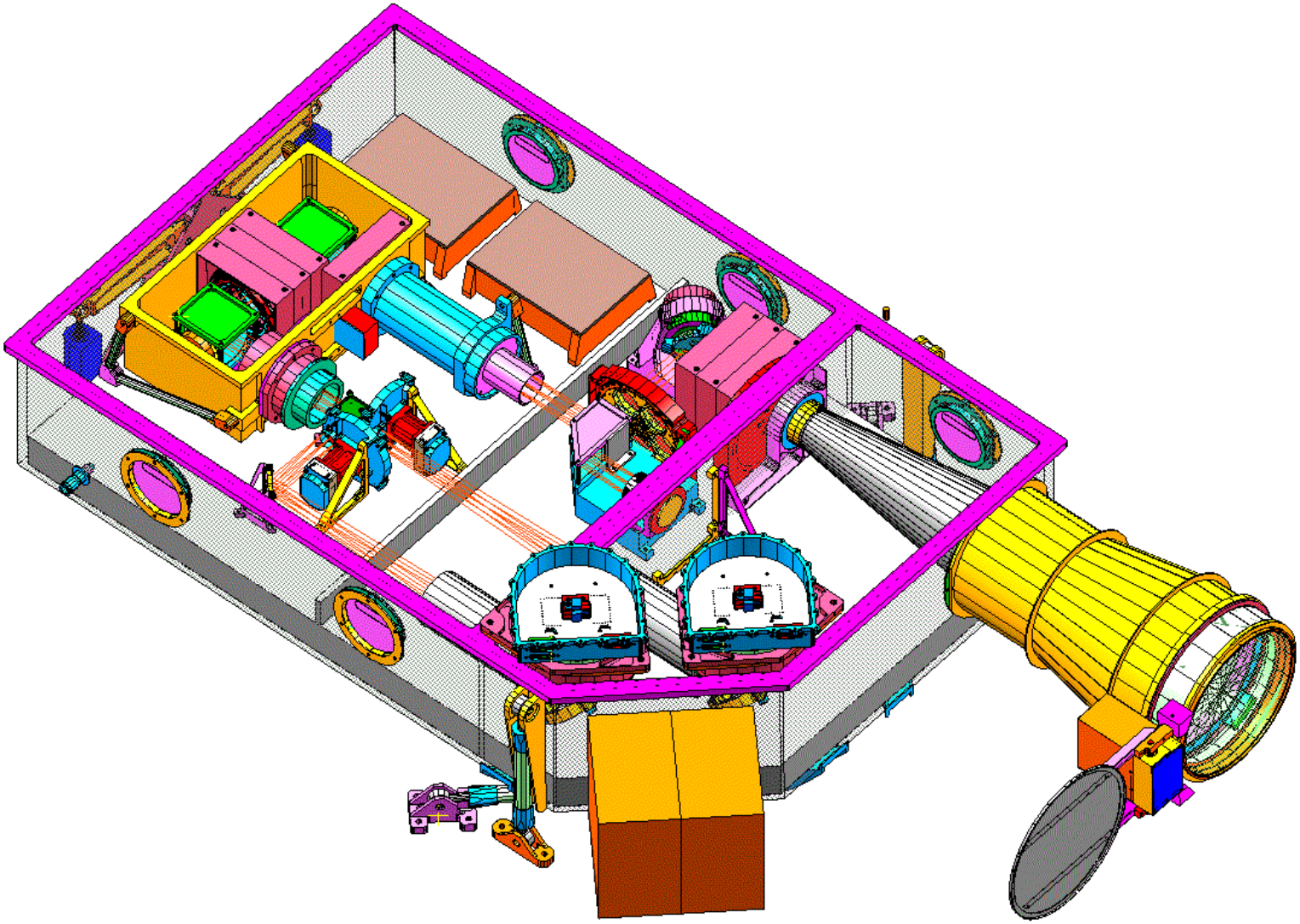

Changes from Original Proposal – Quality/Assurance

- The HMI Mission Assurance plan described in the proposal was based on the recent Solar-B and Stereo experience. The initial SDO Mission Assurance Requirements document would require a significant increase in parts costs and effort compared to the proposal plan.
- Recent discussions with Goddard have resulted in a compromise between the proposed effort and the initial SDO MAR, however, additional effort will be required to support the requested quality and assurance.

Changes from Original Proposal – Cost & Schedule

- The current Phase A contract was implemented less than a month after the proposal start date of 1 September 2002. As such, our current schedule is consistent with the proposal schedule with the exception that the effort ramp up has been slightly slower than proposed.
- We are in the process of reviewing the proposal effort to update our cost estimates. Beyond refining these estimates, there are three areas of anticipated cost growth.
  1. The cost of the HMI cameras now needs to be included in the NASA cost because the proposed UK contribution to HMI is not available.
  2. There are additional costs for supporting the instrument Mission assurance at the level requested by Goddard.
  3. Design changes to increase the HMI reliability and redundancy will result in additional instrument costs.
- The proposed Phase E funding is insufficient to support the HMI science after the first two years after launch. We would like to understand how best to increase the post launch science support, and how to provide appropriate cost estimates.

Risks Assessment – Science Investigation

- The primary risk to the science investigation is the limited budget proposed for science support in both the development and operations phases.
- Current development support for the HMI co-investigators only provides for coordinating integration of science analysis algorithms into the HMI data production pipeline. There is no support proposed for "new" research including development of local helioseismology techniques or modeling coronal magnetic fields from photospheric vector magnetic field measurements.
- Per the AO instructions, science support in the HMI proposal was included for only the first two years after launch. Costs for the remaining four years were primarily to support instrument operations and data collection and processing.
- The Targeted Research and Technology grants must be funded at a sufficient level to insure that the coordinated co-investigator support is available for the HMI science development before and after launch.

Risks Assessment – Instrument Development

- **Filter performance:**
  - The Lyot filter and Michelson interferometers are the heart of the HMI instrument. Although we have previously built these filters for the MDI instrument, there are relatively few vendors with the specialized skills necessary for their fabrication. We are working aggressively to develop detailed filter specifications and identify potential vendors.
- **Mechanisms longevity :**
  - Although the hollow core motor and shutter planned for HMI have significant flight heritage, the required number of mechanism moves is of concern. Lifetests of the hollow core motors and shutters are planned to validate their performance for the planned SDO mission duration.
- **Thermal performance:**
  - The thermal stability of the HMI instrument is critical to achieving it's ultimate performance. Detailed thermal modeling and subsystem thermal testing will be used to optimize the thermal design.

Risks Assessment - Programmatic

- **HMI camera electronics has potential schedule/cost impact:**
  - **Obtaining SECHHI derived camera electronics from the Rutherford Appleton Laboratory in the UK is a viable option for HMI, but the development schedule is not know in detail. If this option is chosen, we feel it is best that we obtain the camera electronics directly from RAL.**
  - **A modified Solar-B/FPP camera electronics developed by LMSAL will also meet the HMI requirements. This option has less schedule risk, but costs and camera power and mass are higher than the RAL camera.**
- **We are concerned that ITAR restrictions may impede the flow of information regarding HMI instrument design and performance to the science community.**
- **Supporting the multitude of meetings and reviews is a challenge. We desire efficient communications, but we also need time to get our work done.**

Doc. No. HMI00136

HMI-S/C Compatibility

Brock Carpenter, LMSAL
Brock.A.Carpenter@LMCo.com
650-424-2776

Compatibility of HMI with SDO Mission and Spacecraft Concepts

HMI
Stanford University
LOCKHEED MARTIN
Advanced Technology Center

- **No known major spacecraft compatibility issues with the baseline HMI**
  - Spacecraft appears capable of providing sufficient critical resources; volume, mass, power, stability, telemetry, and thermal field of view
- **Camera Electronics Box requires an increase in power**
  - Baseline CEB power has increased since the proposal
  - Alternative CEB power is higher than baseline
  - Need to work this closely with SDO power group during the CEB trade study process

Doc. No. HMI00135

HMI Technical Resources

Brock Carpenter, LMSAL
Brock.A.Carpenter@LMCo.com
650-424-2776

HMI Resources

- Envelope
- Mass
- Power
- Telemetry

HMI Envelope – Proposal Values

	OP	CEB	EB	Harness
Length (cm)	118	19	32	200
Width (cm)	53	15	28	-
Height (cm)	24	7.5	21	-

OP Envelope – 13 Mar 03

HMI
Stanford University
LOCKHEED MARTIN
Advanced Technology Center

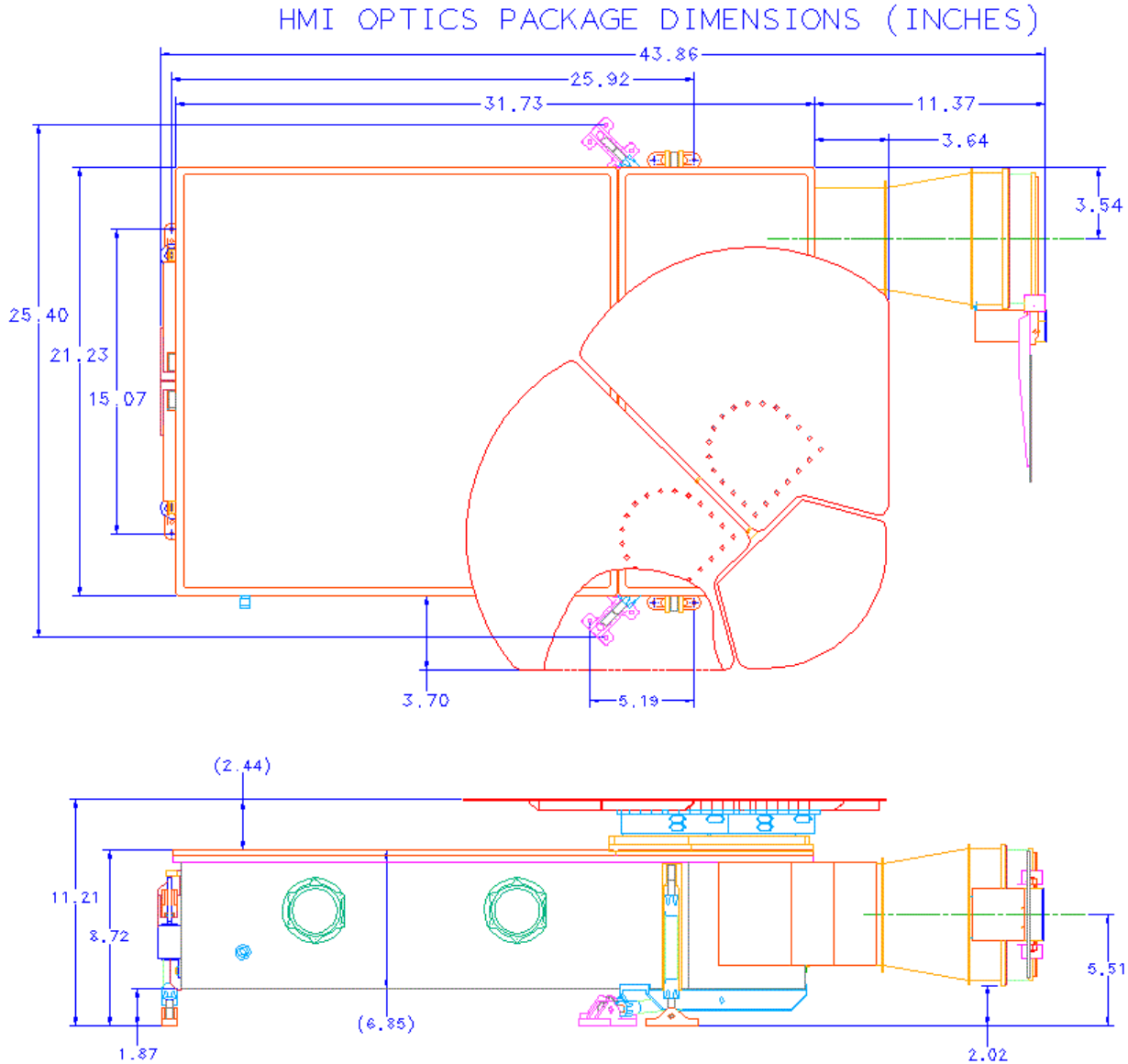

Electronics Box Envelope – 13 Mar 03

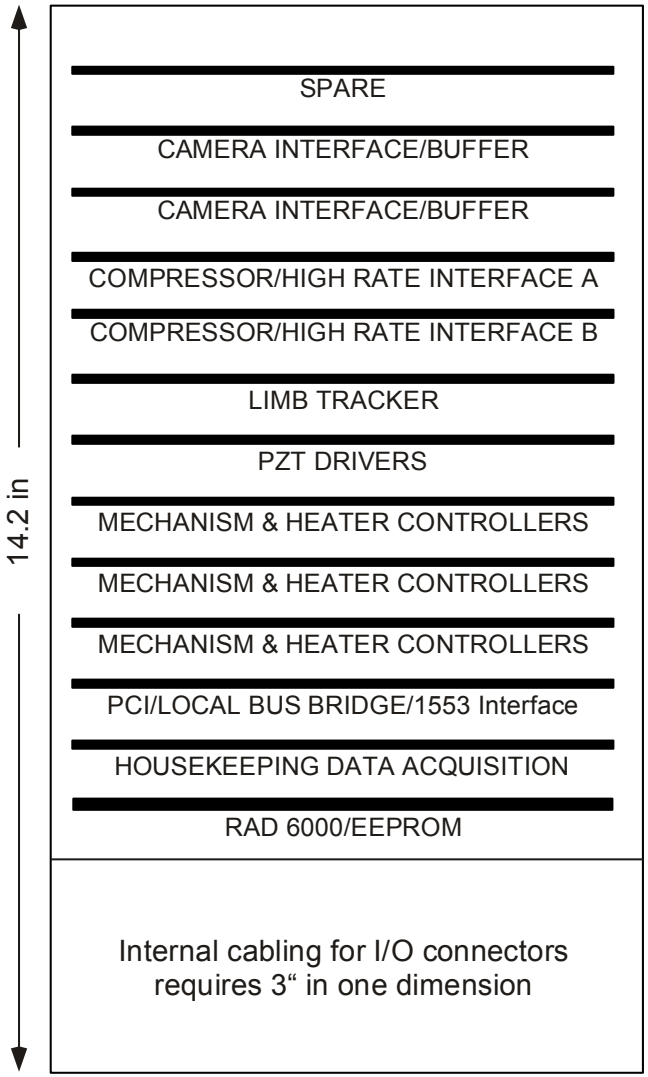

Top View

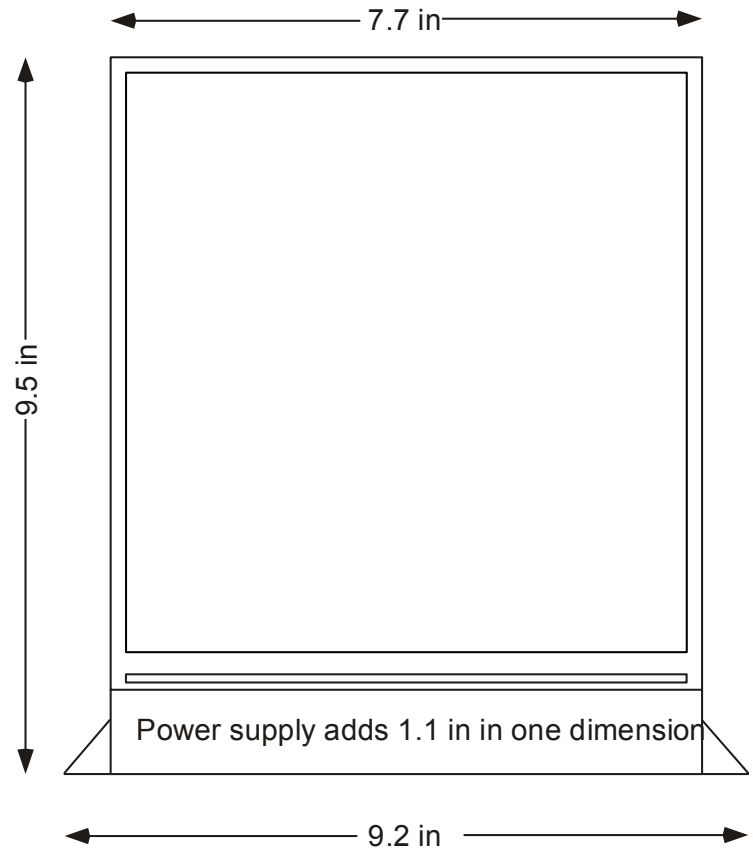

End View

Harness – 13 March 03

- **Harness Length**
  - No practical limit. 2 meters presumed for mass estimate
  - No change since the proposal

HMI Resources – Mass

- **Mass**

	Proposal	13 Mar 03
– Optics Package (w/CEB):	28	< 34 kg (TBC)
– Electronics Box:	15	< 15 kg (TBC)
– Harness:	3	< 3 kg (TBC)

- **Notes on 13 Mar Values**
  - Includes redundant mechanisms
  - Includes larger OP for additional mechanisms, and ease of integration and alignment
  - Excludes any reserve in OP
  - Electronics Box mass does not include redundant power convertors

HMI Power

				CEB Options	
	Proposal			LMSAL	RAL
Item	Apr-02	Oct-02	Nov-02	Mar-03	Mar-03
EB Electronics	25	28	30.5	30.5	30.5
OP Oven Control	0	1	1	1	1
OP Filter Oven	3	3	3	3	3
ST	28	32	34.5	34.5	34.5
PC Inefficiency	12	14	14.8	14.8	14.8
ST	40	46	49.3	49.3	49.3
OP Heaters	5	4	13	13	13
ST	45	50	62.3	62.3	62.3
CEB	15	13	13	30	20
Margin	12	13	15	15	15
TOTAL	72	76	90.3	107.3	97.3

Note: During initial CCD decontamination (heaters only): 22 W (TBC)

HMI Telemetry – 13 Mar 03

- **Telemetry Data Rate**
  - Nominal science data: 55 Mbits/sec (Primary & Redundant channels)
  - Housekeeping data: 2.5 kb/sec
  - Diagnostics data: 10 kb/sec
  - Command uplink: 2.6 kb/sec (max)

Spacecraft Resource Drivers

- **Data Continuity & Completeness**
  - Capture 99.99% of the HMI data (during 90 sec observing periods)
  - Capture data 95% of all observing time
- **Spacecraft Pointing & Stability**
  - The spacecraft shall maintain the HMI reference boresight to within 200 arcsec of sun center
  - The spacecraft shall maintain the HMI roll reference to within TBD arcsec of solar North
  - The spacecraft shall maintain drift of the spacecraft reference boresight relative to the HMI reference boresight to within 14 arcsec in the Y and Z axes over a period not less than one week.
  - The spacecraft jitter at the HMI mounting interface to the optical bench shall be less than 5 arcsec (3 sigma) over frequencies of 0.02 Hz to 50 Hz in the X, Y and Z axes.
- **Reference Time**
  - Spacecraft on-board time shall be accurate to 100 ms with respect to ground time (goal of 10 ms)

Status of Trade Studies – Completed –

- **Wavelength**
  - 6173 Å vs. 6768 Å: 6173 Å selected
- **CPU**
  - RAD 6000 vs. RAD 750 vs. Coldfire: RAD 6000 selected (from SXI)
- **High-Rate Telemetry Board**
  - Single Board or to include a redundant board: Redundant concept selected
- **Sensor Trade**
  - CMOS vs. CCD Detector: CCD selected

Status of Trade Studies – In Process –

- **Inclusion of redundant mechanisms in OP**
  - Increased reliability vs. Increased cost & mass
  - Have allocated volume to not preclude additional mechanisms
- **Inclusion of redundant power supply in HMI Electronics Box**
  - Increased reliability vs. Increased cost & mass
  - Just started this trade
- **Camera Subsystem**
  - Evaluating two options
    - Procure from RAL an evolution of a SECCHI Camera
    - Build in-house an evolution of a Solar-B FPP Camera
- **Location of Mechanism Control Boards**
  - This trade to be considered only if mass becomes an issue
  - Single HMI Electronics Box or an additional Mechanism Electronics Box
  - Single box saves box mass, two boxes simplifies harness
  - Need to understand S/C layout to determine harness lengths
  - Radiation environment will affect mass of box(es)

HMI Assembly Integration & Test Approach

Larry Springer LMSAL
larry.springer@lmco.com
650 354 5773

HMI Integration and Test

- The subsystems are tested and characterized to the extent that is reasonable prior to being integrated into the next level of assembly
- The optical components are set up and tested on an optical table prior to being installed in the optics package

HMI Assembly & Integration Flow

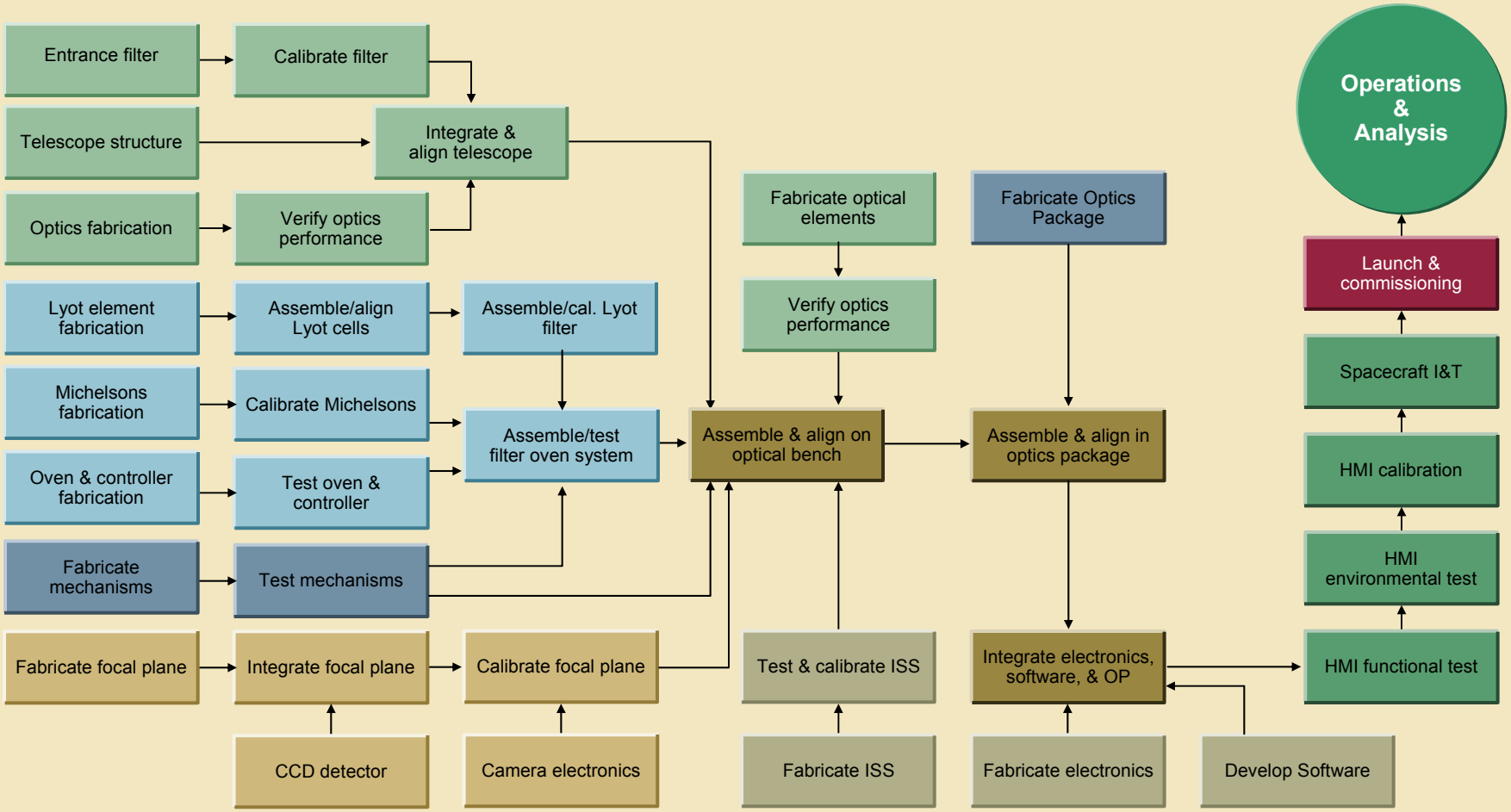

Lyot Filter Assembly & Integration

- Elements each consisting of 2 calcite pieces, 2 ADP or KDP pieces, a polarizer and 3 waveplates are built first
  - These are tested as sub units prior to assembly into a Lyot filter
- The Lyot elements are aligned on an optical bench and tested with laser and sunlight prior to being keyed and assembled into a Lyot filter
- The Lyot is characterized with laser and sunlight prior to release to the next level of assembly

Michelson Assembly & Integration

- The Michelson design will be based on the MDI & GONG designs
- A Michelson vendor will be selected early in the program
  - Survey and visits to potential vendors are in progress
  - Selection will be based primarily on technical competence and understanding of the high precision required to fabricate the HMI Michelsons
- A set of "brassboard" Michelsons will be fabricated as early in the program as practical
  - These will be built to flight standards so that they could be flight spares if their performance is adequate
  - The brassboard Michelsons will be carefully characterized to see if any design or fabrication changes are needed prior to flight Michelson fabrication
  - The brassboard Michelsons will be vibrated & thermal cycled in their mounts to verify the mechanical aspects of the design
- The flight Michelsons (and spares) will be fabricated by the same vendor
  - The flight Michelsons will be carefully characterized prior to integration into the filter oven

Filter Oven Integration & Test

- A brassboard filter oven and oven control electronics will be built early in the program.
  - It will be loaded with mass model optics and mechanisms
  - It will be extensively instrumented
  - It will be tested and characterized in a thermal vacuum chamber
- The design of the flight oven and oven controller will be updated as necessary
- The Michelsons, Lyot filter and HCMs will be carefully aligned to each other during oven assembly
- The oven is then mounted into the optics package in a fixed position
- The other optics are aligned to the oven.

Mechanism Assembly & Integration 1

- The HMI mechanisms have extensive heritage from the MDI, TRACE, Solar-B, SXI, and SECCHI programs
- The hollow core motors and shutters will have an extensive lifetest program because of the large number of moves required over the mission life
  - Brassboard & lifetest units built early in the program to flight drawings & standards
  - Lifetest units tested, run in, and characterized prior to lifetest
  - The lifetest units are then subjected to thermal cycling
  - The lifetest units subjected to random vibration to GEVS qualification levels prior to lifetest
  - The lifetest is conducted in vacuum at elevated temperature for 2X the 5 year mission number of operations (TBC may not be practical)
    - The dwell times are shortened to reduce the calendar time required for the test, but the motor makes the correct number of starts & stops and runs at flight speed
    - The lifetest is automated by a PC so that only a minimum of monitoring by an engineer is required
    - Mechanism is characterized periodically during test
    - After the test the mechanism stripped down and inspected (esp. bearings)
  - Because of the duration of the lifetest it is not possible wait for completion prior to fabricating the flight mechanisms

Mechanism Assembly & Integration 2

- The focus/calibration wheels, alignment mechanism, and door require only a modest number of moves in operation and will not require a lifetest because of their significant flight heritage
  - They will have a brassboard that is tested and characterized prior to assembly of the flight units
- All mechanisms will be tested, calibrated, and run in prior to integration into the next assembly

Focal Plane Assembly & Integration

- The CCD will be tested and characterized with a lab or development camera prior to mounting into the FPA
- The FPA will be tested with a development camera prior to integration into the optics package
- A development CCD, FPA, and camera may be used in place of the flight units during the early stages on the optics package integration

Image Stabilization System

- A brassboard of the image stabilization system will be built early in the program
  - It will be tested with the stimulus telescope to verify the ability to remove known amounts of jitter
- The characterization of the flight ISS must be done in the flight optics package because the mechanical characteristics of the package and mounts can change the characteristics of the ISS
  - The active mirror, limb sensor, and the ISS control electronics will each be tested as a subsystem prior to integration.
  - The final selection of labset components must be done as part of the characterization at the system level.
  - The final system gains will be set on orbit

Electronics Box Integration & Test

- A limited set of brassboard electronics will be built early in the program to verify the designs
- The flight electronics will be assembled and soldered to flight standards prior to test but will not be conformal coated until after the electronics box has completed its functional test.
- Each electronic board will pass a board level functional test prior to being integrated into the flight electronics box.
- The flight electronics box will complete a box level functional test prior to being integrated with the HMI optics package
- The electronics box will be tested using versions of the flight software.

Software Assembly & Integration

- The HMI flight software will be developed in accordance with the LMATC standard software process as documented in the HMI software development plan
- Prior to use on the flight hardware each build will be tested on a software test bed and on the HMI brassboard system.
- The HMI flight software will be controlled so that each previous build can be recreated in order to duplicate the environment of earlier tests.

Structural Thermal Model

- As required an HMI Structural Thermal Model (STM) will be delivered
- It will be used to verify the HMI OP structural design prior to delivery
- The main structure and mounting legs will be high fidelity
- The internal components will be represented with dummy masses
- There will be no optics or active mechanisms included
- We recommend that it be reduced to a structural model as we have found the thermal part of STMs to be of marginal value
- If it remains a thermal model the heat sources will be simulated with surface heaters. These will simulate only the steady state operating condition.
- Prior to delivery the STM (SM) will be acceptance tested as follows
  - Mass properties
  - Sine & random vibration
  - Thermal balance (only if STM)

HMI Test Approach

Larry Springer LMSAL
larry.springer@lmco.com
650 354 5773

Functional Test Approach

- HMI will use a structured test approach so that the test at each point in the program can be appropriate to the need and consistent test results can be obtained
- The tests will be controlled by STOL procedures running in the EGSE and will use released test procedures
- The Aliveness test will run in less than 30 minutes and will do a quick test of the major subsystems
- The Short Form Functional Test (SFFT) will run in a few hours and will test all subsystems but will not test all modes or paths. It will not require the stimulus telescope
- The Long Form Functional Test (LFFT) will run in about 8 hours and will attempt to cover all paths and major modes. The SFFT is a subset of the LFFT. The LFFT will require the use of the stimulus telescope
- Special Performance Tests (SPT) are tests that measure a specific aspect of the HMI performance. These are detailed test that require the stimulus telescope or other special setups. They are used only a few times in the program

Environmental Test Approach

- In general environmental test will be done at the integrated HMI level to protoflight levels & durations
- The preferred order of testing is:
  - LFFT
  - SPT for Calibration
  - SPT for Sunlight Performance
  - EMI/EMC
  - LFFT
  - Sine & Random Vibration
    - Electronics & Optics Package separately
    - Powered off
  - LFFT
  - Thermal Vacuum / Thermal Balance
  - LFFT
  - SPT for Calibration
  - SPT for Sunlight Performance in vacuum
  - Mass Properties
  - Delivery

Instrument Calibration Approach

- Critical subsystems will be calibrated at LMSAL prior to integration these include
  - The CCD cameras
  - The Michelsons
  - The Lyot filter
  - Mechanisms
  - Other optical elements
- The completed HMI will be calibrated at LMSAL using lasers, the stimulus telescope and the Sun
- The completed HMI will be calibrated at LMSAL in vacuum using both the stimulus telescope and the Sun

Spacecraft Simulator Testing

- Upon receipt from GSFC the spacecraft simulator will be tested with:
  - 1553 interface brassboard RAD6000 and prototype software
  - High rate data from the brassboard electronics
  - The HMI EGSE system
- It will then be integrated with the HMI EGSE system and used for the remainder of the test program

HMI Functional Test on Observatory

- SFFT / LFFT / SPT are derived from Instrument level tests
- We assume that GSFC will provide an interface to the HMI EGSE so the same EGSE system can be used to test HMI after integration onto the spacecraft
- We will use the HMI stimulus telescope to verify HMI calibration while HMI is mounted on the spacecraft
- We recommend the inclusion of a spacecraft level jitter compatibility test

HMI Environmental Test on Observatory

- HMI has no known special environmental test requirements

Doc. No. HMI00137

A Few Programmatics

Jake Wolfson LMSAL
wolfson@lmsal.com
650-424-4032

HMI Cost Deltas at LMSAL

- We have not recosted the LMSAL HMI effort since the proposal costing, but anticipate only a few areas where costs will change/increase.
  - A updated and formal cost proposal is to be part of the Phase A report
- No fundamental/major changes in the anticipated program, other than the cameras no longer being provided by the UK with no exchange of funds, have occurred. However, some modest changes are likely. These include:
  - A somewhat more extensive Mission Assurance program, primarily in the areas of software quality assurance and reliability. Can't be costed until the revised MAR is out and a PAIP is written and signed off; but not expected to be terrible.
  - Addition of some redundant elements; perhaps two more hollow-core motors, a second high rate data interface, a redundant power converter, etc.
  - Increased Phase E science effort.
  - Perhaps a decrease in effort associated with the Structural-Thermal physical unit if the thermal aspects are removed from it.
- The major cost impact is, of course, that the camera systems (both the CCDs and the camera electronics) must now be paid for with US funds.

HMI Focal Plane Sensors

- Baseline of 4096 x 4096 pixel (12 micron) CCDs
- Trade study on use of CMOS sensors about to eliminate this option
- Baseline vendor is E2V
  - Continue to consider alternate vendor(s)
    - Mainly Semiconductor Technology Associates (R. Bredthauer)
- Agreements reached to date
  - SHARP and HMI to use identical CCDs
  - E2V to be given a design phase contract ASAP
    - Specification drafted - includes new capabilities that in turn make the camera electronics design more optimal and requires less power.

HMI (CCD) Camera Electronics

HMI
Stanford University
LOCKHEED MARTIN
Advanced Technology Center

- **Trade off of approaches yields two principal paths**
  - Develop cameras in-house => evolution of the Solar-B FPP FG camera
  - Procure cameras from RAL => evolution of the SECCHI camera
- **Key Considerations for decision on approach**
  - Schedule => very critical
  - Cost => RAL approach less expensive if already doing SHARPP cameras
  - Performance => both "good enough" but RAL better
- **Recommendations if procure camera from RAL**
  - Baseline same camera for SHARPP and HMI
  - Have separate RAL subcontracts from LMSAL and NRL
    - Programmatically very advantageous
  - Continue to study FPP-option through Phase A
- **Recommendation if develop camera in house**
  - Do not provide cameras for SHARPP
  - Keep informed on RAL-for SHARPP camera status and vice versa